EXPLODED VIEW FOR REFRIGERATOR

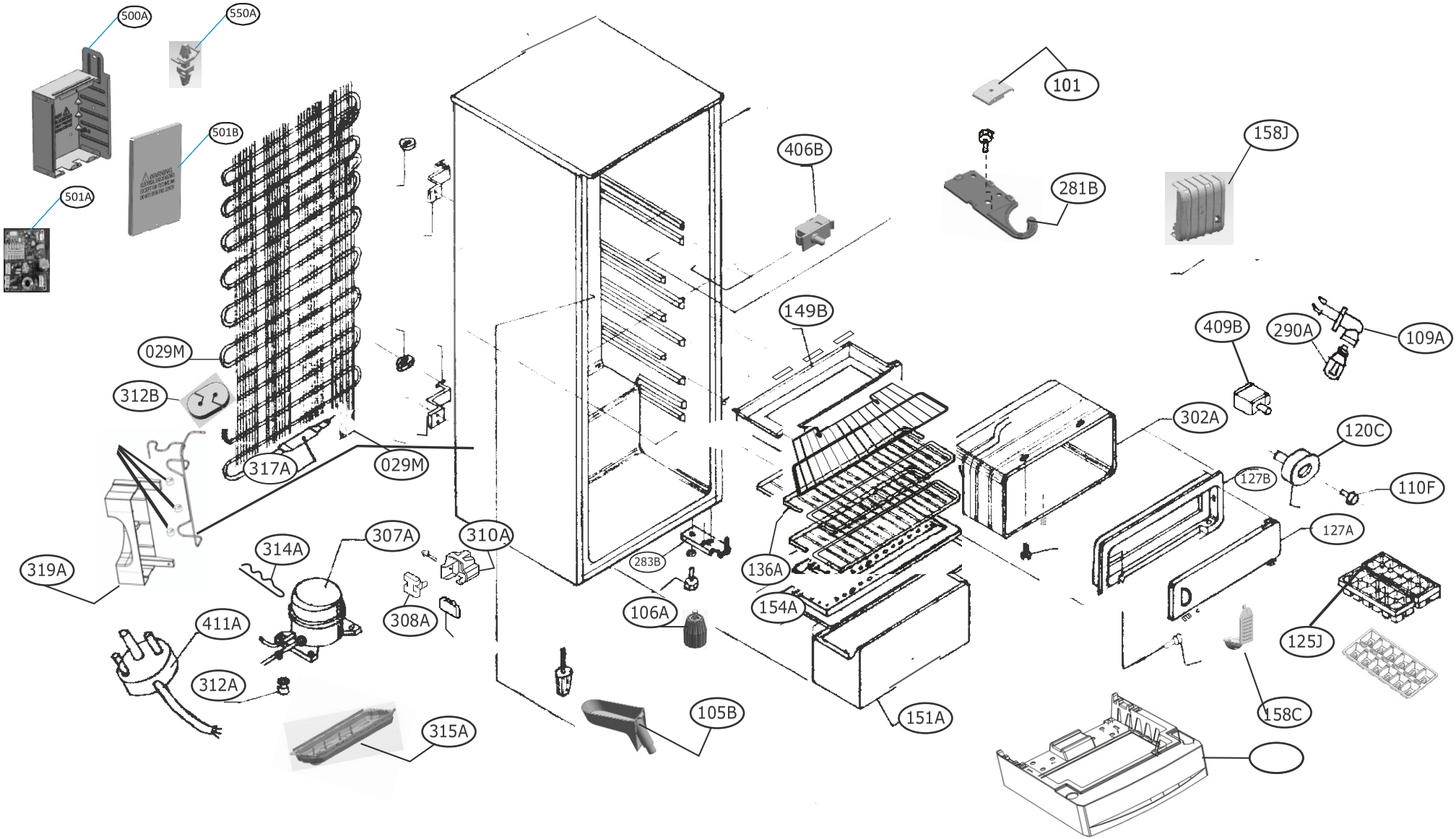
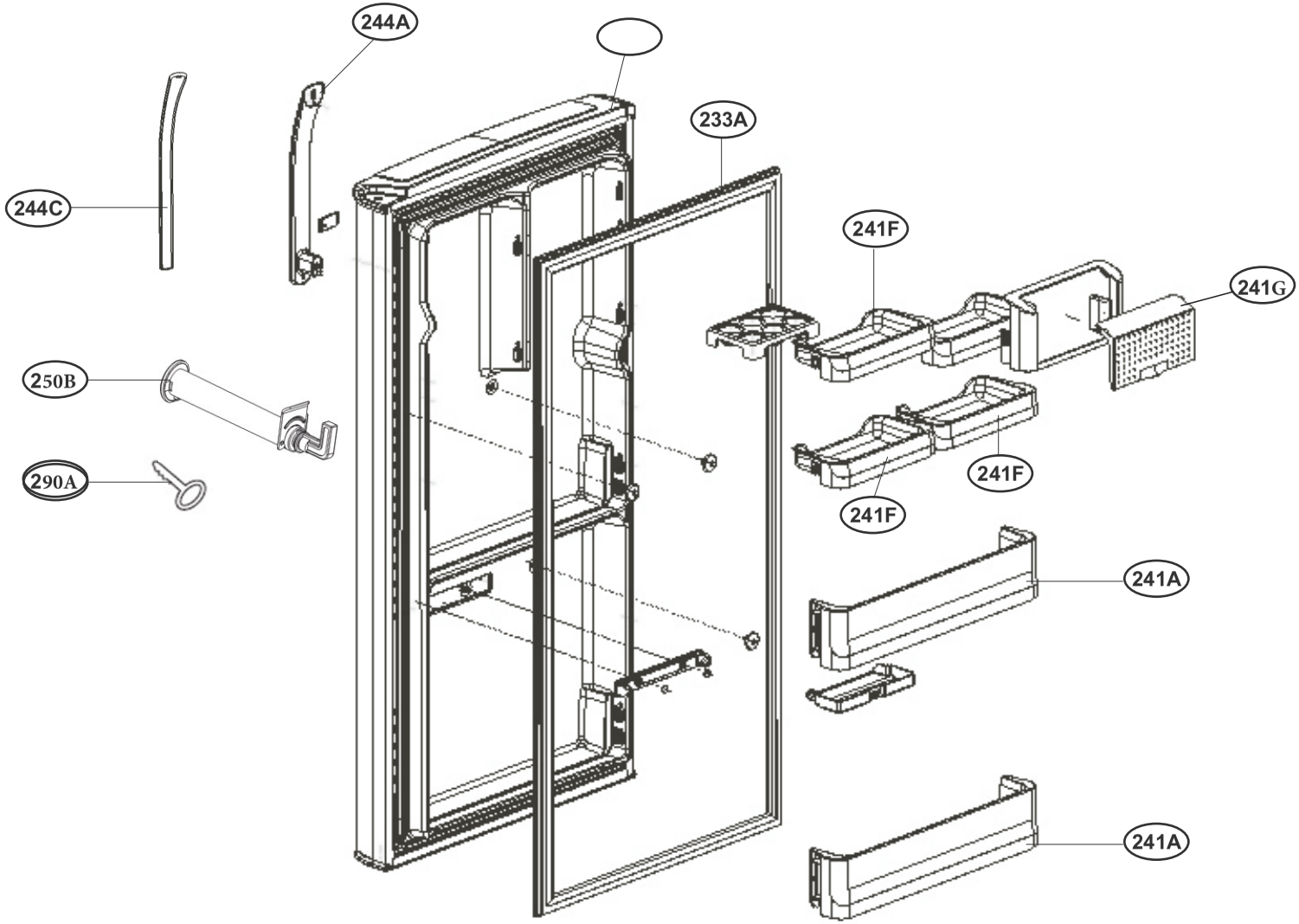
EXPLODED VIEW FOR REFRIGERATOR